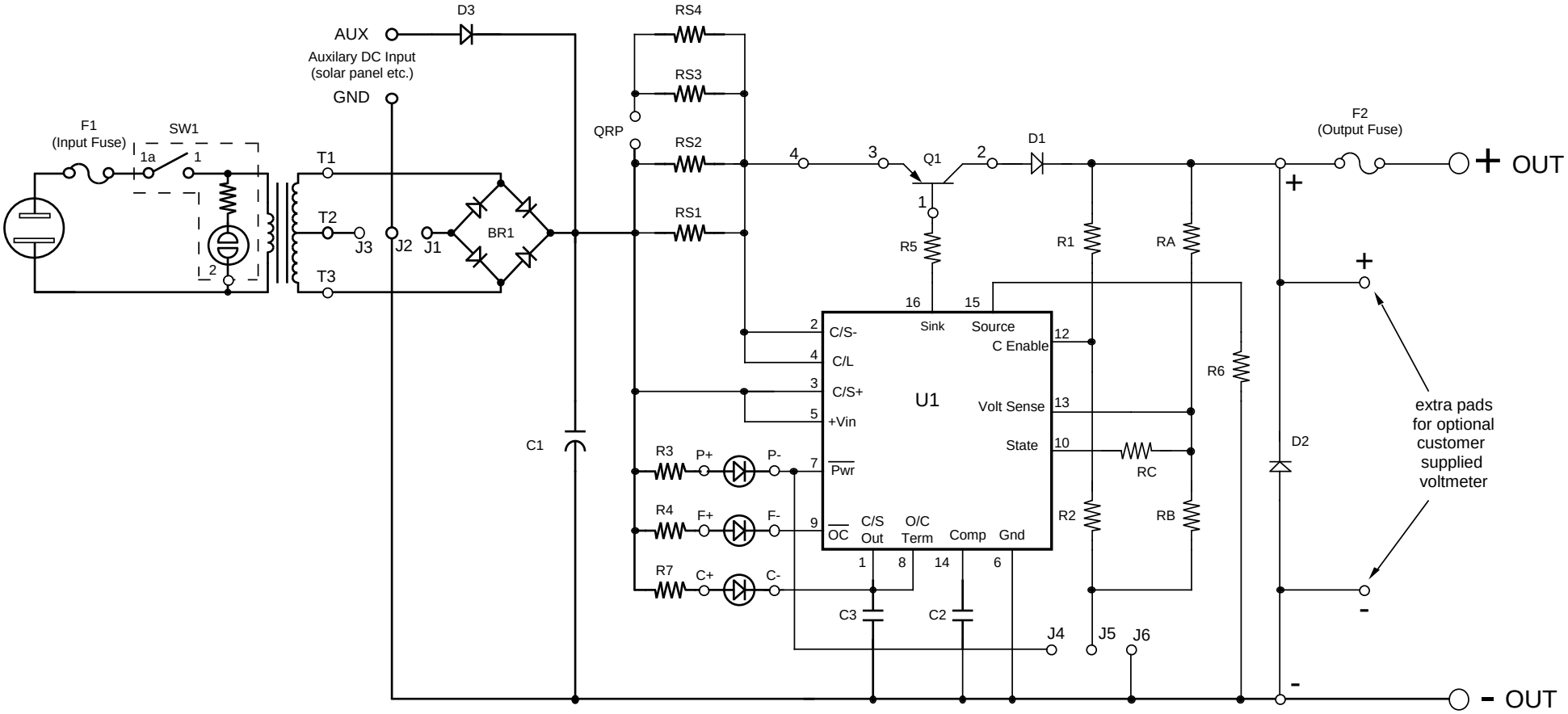

NOTE:

The A & A Engineering circuit board provides for some options.
The schematic and component layout show some of the options.

Not all of the parts shown are used for each version. Refer to the parts list for details concerning the version you are working with.

A & A Engineering		2521 W. La Palma, Unit K Anaheim, CA. 92801 USA
SCALE n/a		DRN BY STAS A
DATE 18 MAY 87		REV 15 JUN 06
Smart Battery Charger - Low I		
Schematic	DRAWING NUMBER 492-150	REV H